A Verified Optimizer for Quantum Circuits

Kesha Hietala, Robert Rand, Shih-Han Hung, Xiaodi Wu, Michael Hicks

&

Verified translation between low-level quantum languages

Kartik Singhal, Robert Rand, Michael Hicks

PLanQC 2020

Verified Compiler Stack

- End goal: *verified compiler stack* for quantum programs

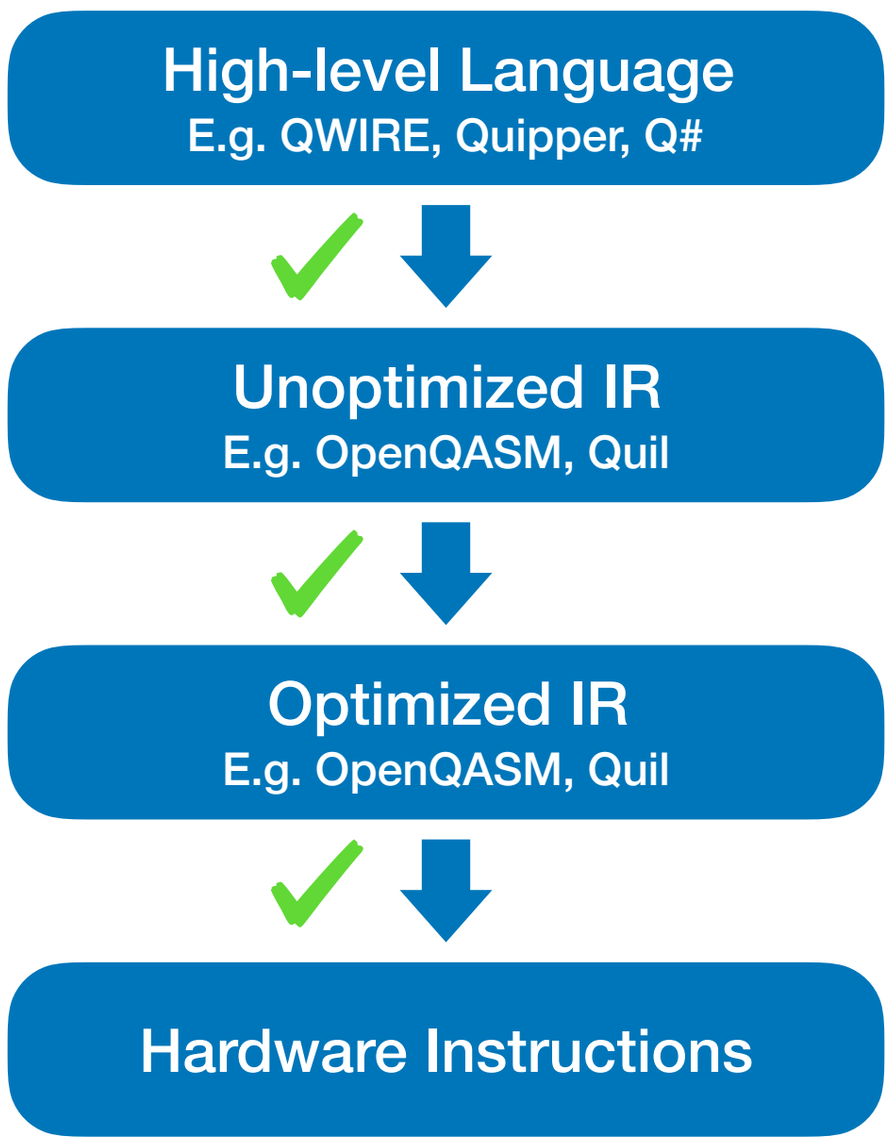

Verified Compiler Stack

- End goal: *verified compiler stack* for quantum programs

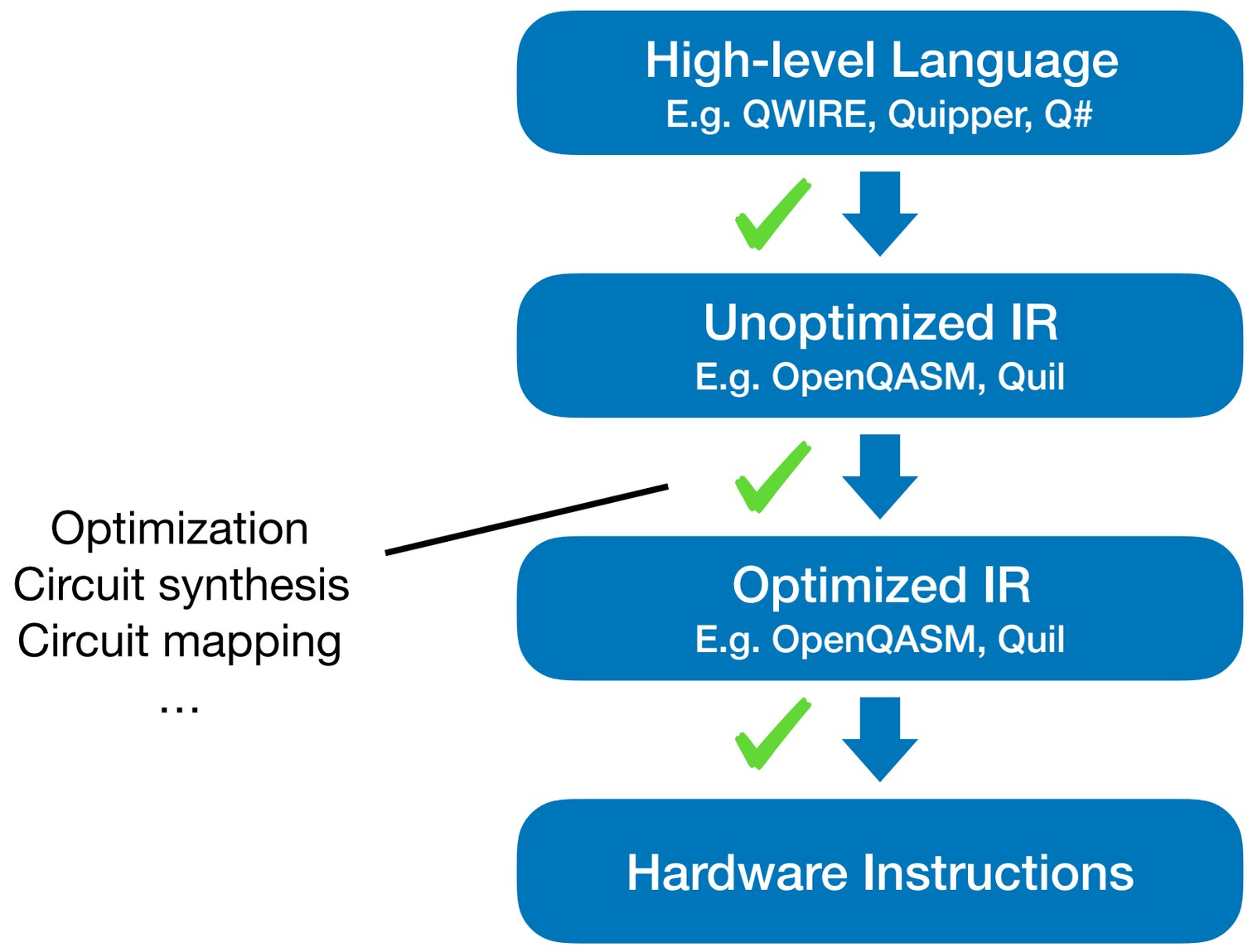

Verified Compiler Stack

- End goal: *verified compiler stack* for quantum programs

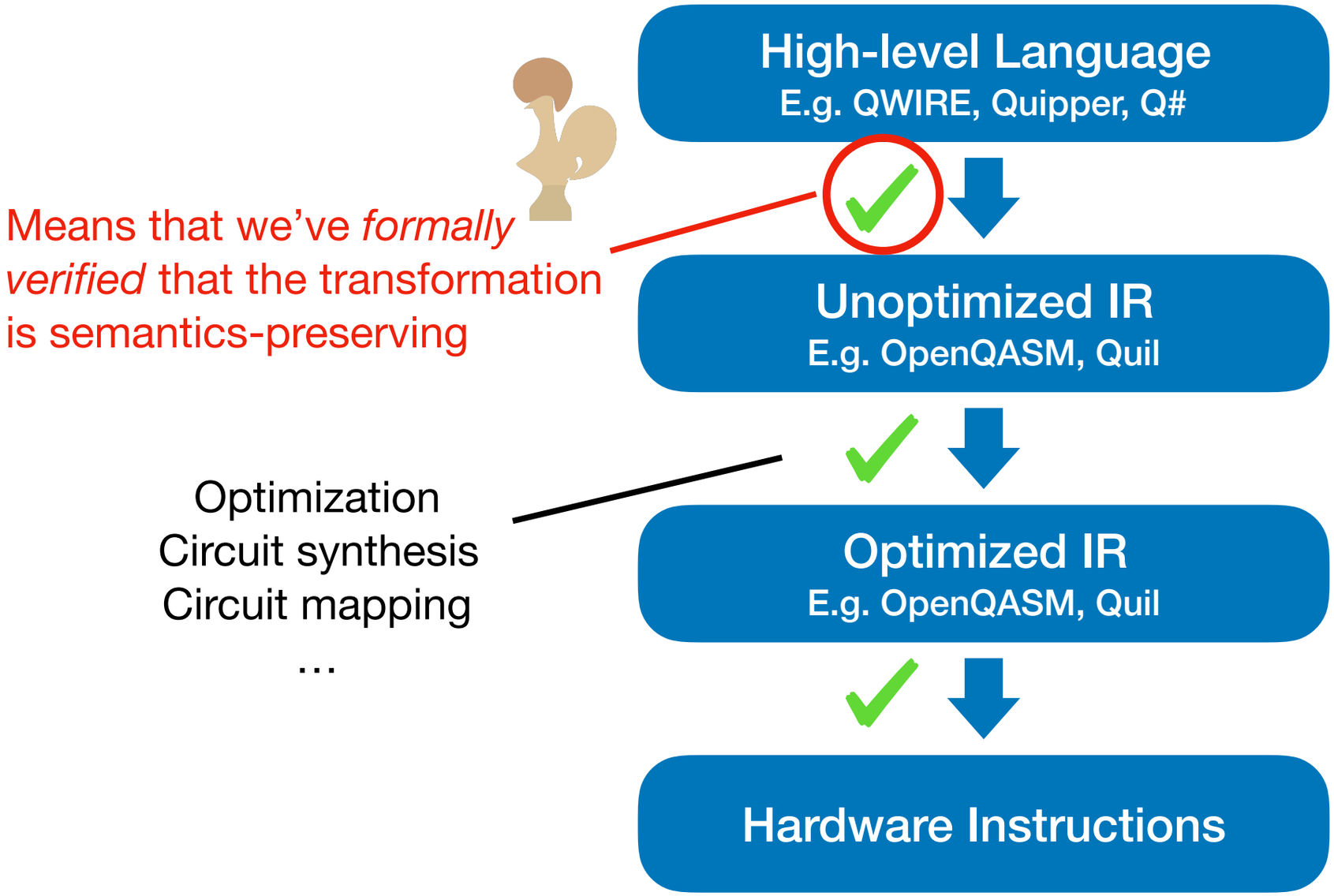

Verified Compiler Stack

- We present **VOQC**, our Verified Optimizer for Quantum Circuits, which is built on top of **SQIR**, our Small Quantum Intermediate Representation

- Implemented in 8000 lines of Coq code, with 1500 for core SQIR and the rest for program transformations

- 400 lines of standalone OCaml code for parsing and translating OpenQASM

- We extract VOQC to OCaml and compile it to a binary, so using VOQC doesn’t require knowledge of Coq or OCaml

Verified Compiler Stack

- End goal: *verified compiler stack* for quantum programs

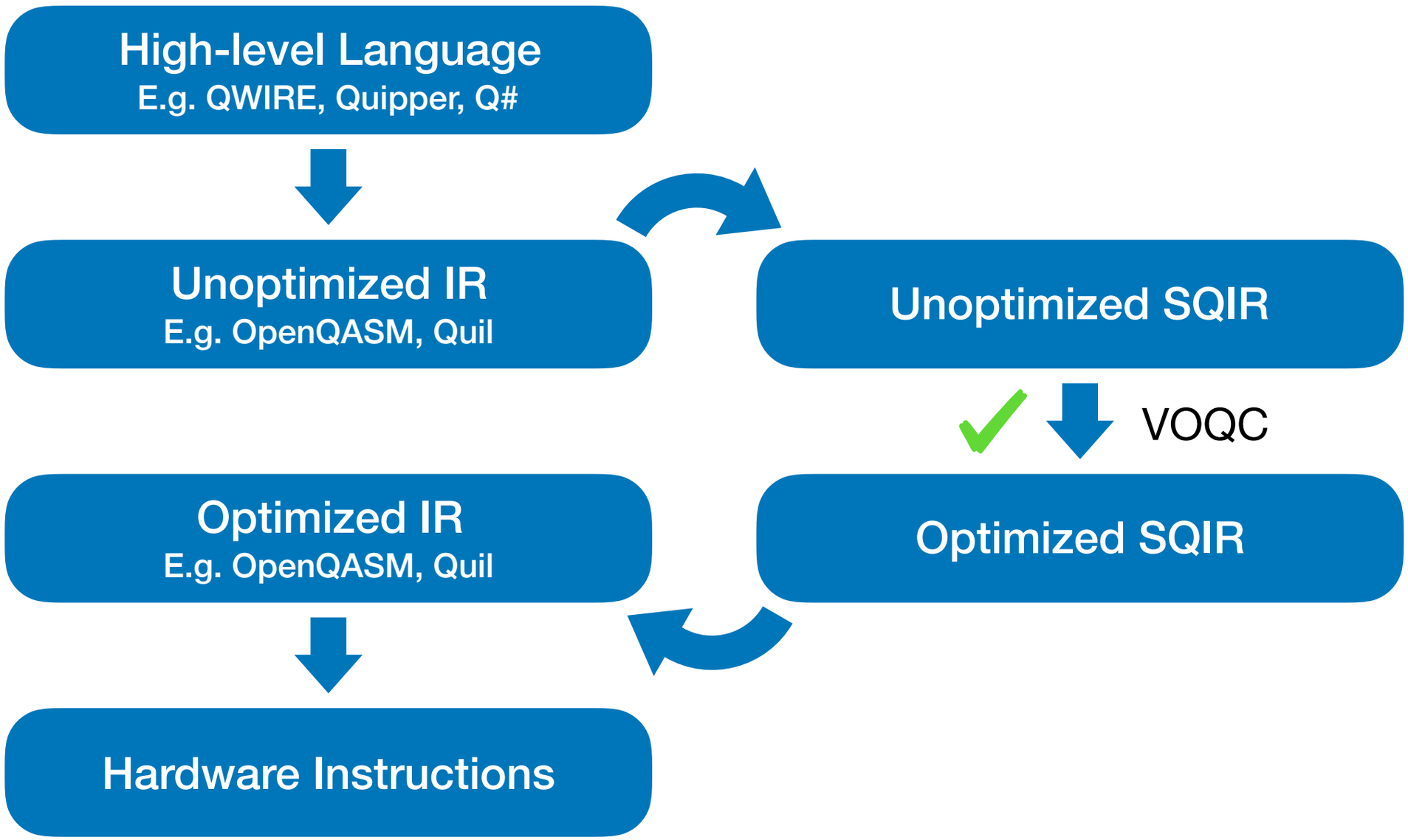

SQIR

- Syntax

$$U \;:=\; U_1;\; U_2 \;\big|\; G\; q \;\big|\; G\; q_1\; q_2$$

$$P \;:=\; \texttt{skip} \;\big|\; P_1;\; P_2 \;\big|\; U \;\big|\; \texttt{meas}\; q\; P_1\; P_2$$

- Semantics assumes a **global register** of size *d*
  - A unitary program corresponds to a unitary matrix of size $2^d \times 2^d$
  - A non-unitary program corresponds to a function between density matrices of size $2^d \times 2^d$

SQIR

- Syntax

$$U \;:=\; U_1;\; U_2 \;\big|\; G\; q \;\big|\; G\; q_1\; q_2$$

$$P \;:=\; \texttt{skip} \;\big|\; P_1;\; P_2 \;\big|\; U \;\big|\; \texttt{meas}\; q\; P_1\; P_2$$

- Semantics assumes a **global register** of size *d*

Unitary semantics

$$[\![U_1;\; U_2]\!]_d = [\![U_2]\!]_d \times [\![U_1]\!]_d$$

$$[\![G_1\; q]\!]_d = \begin{cases} apply_1(G_1,\; q,\; d) & \text{well-typed} \\ 0_{2^d} & \text{otherwise} \end{cases}$$

$$[\![G_2\; q_1\; q_2]\!]_d = \begin{cases} apply_2(G_2,\; q_1,\; q_2,\; d) & \text{well-typed} \\ 0_{2^d} & \text{otherwise} \end{cases}$$

Non-unitary semantics

$$\{\!|\texttt{skip}|\!\}_d(\rho) = \rho$$

$$\{\!|P_1;\; P_2|\!\}_d(\rho) = (\{\!|P_2|\!\}_d \circ \{\!|P_1|\!\}_d)(\rho)$$

$$\{\!|U|\!\}_d(\rho) = [\![U]\!]_d \times \rho \times [\![U]\!]_d^\dagger$$

$$\{\!|\texttt{meas}\; q\; P_1\; P_2|\!\}_d(\rho) = \{\!|P_2|\!\}_d(|0\rangle_q\langle 0| \times \rho \times |0\rangle_q\langle 0|) + \{\!|P_1|\!\}_d(|1\rangle_q\langle 1| \times \rho \times |1\rangle_q\langle 1|)$$

VOQC Transformations

- Unitary optimizations - inspired by Nam et al.[1]
  - Gate propagation and cancellation
  - Rotation merging
- Non-unitary optimizations
  - Classical state propagation
  - Removing *z*-rotations before measurement
- Circuit mapping
  - Naive mapping for arbitrary connected graph

[1]Nam et al. *Automated Optimization of Large Quantum Circuits with Continuous Parameters*. 2018.

Example: X/Z Propagation

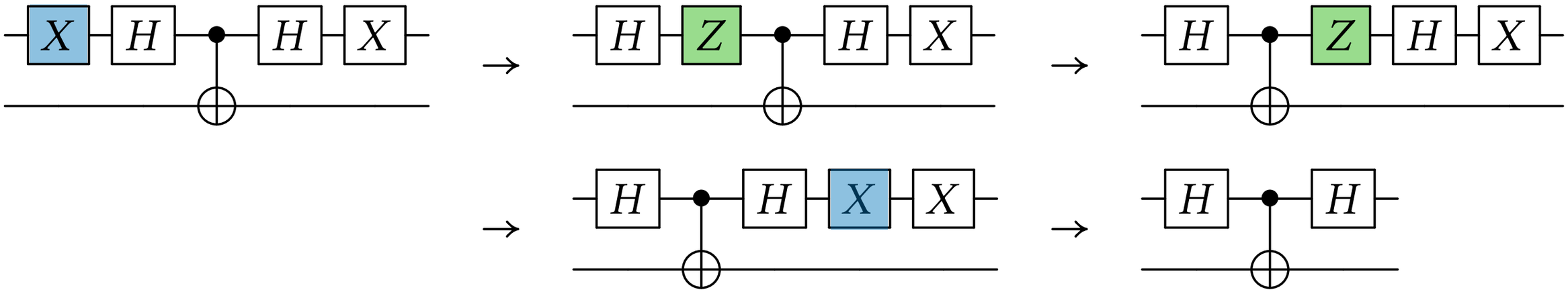

- Simplified code:

```
let propagate_X q lst = match lst with
  | []          → [X q]
  | X q :: t    → t
  | H q :: t    → H q ; propagate_Z q t
  | Rz q :: t → Rz† q ; propagate_X q t
  ...
```

Example: X/Z Propagation

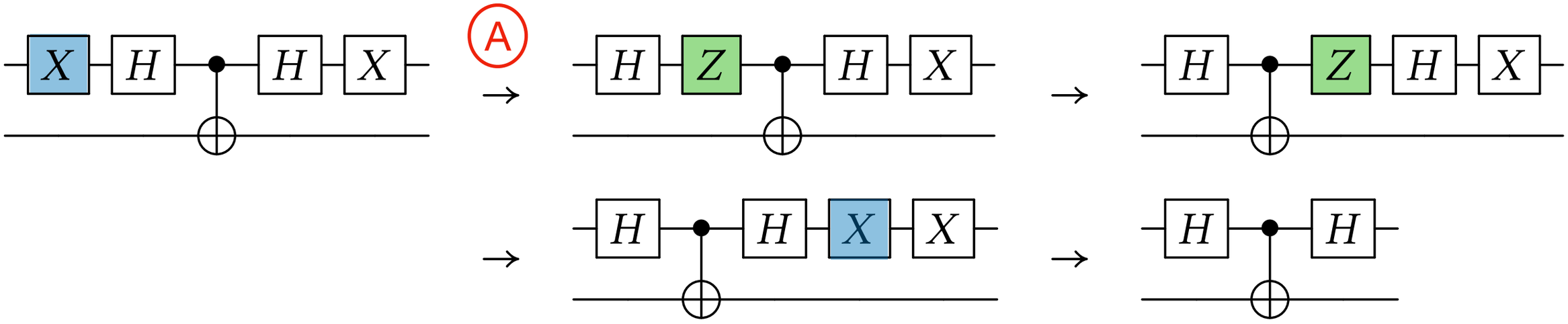

- Simplified code:

```
let propagate_X q lst = match lst with
  | []          → [X q]
  | X q :: t    → t
  | H q :: t    → H q ; propagate_Z q t   (A)
  | Rz q :: t → Rz† q ; propagate_X q t
  ...
```

Example: X/Z Propagation

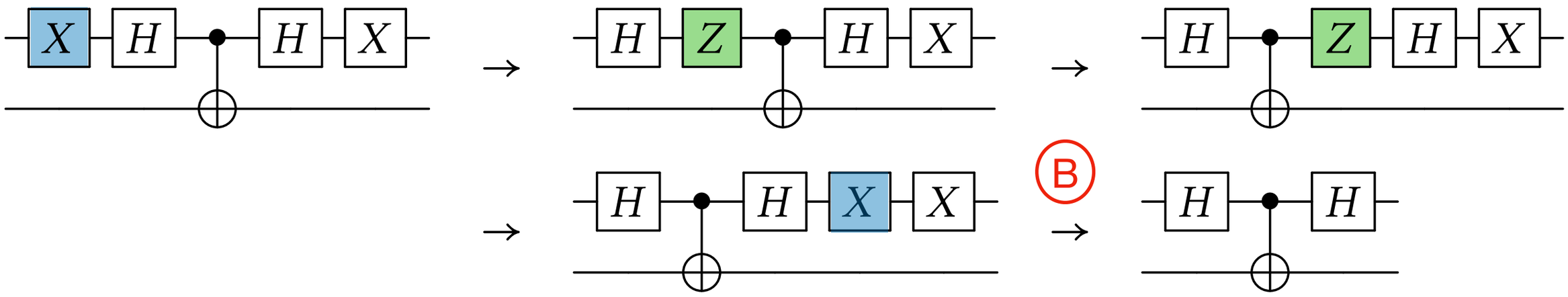

- Simplified code:

```
let propagate_X q lst = match lst with
  | []          → [X q]   (B)
  | X q :: t    → t
  | H q :: t    → H q ; propagate_Z q t
  | Rz q :: t → Rz† q ; propagate_X q t
  ...
```

Proof Overview

- For a transformation T, we want to prove that
  $\forall P, [\![T(P)]\!] = [\![P]\!]$ (up to a global phase)
  - For complex optimizations, rather than proving this equality directly we may prove that $T(P)$ and P have the same output on every basis state

- For circuit mapping we also prove that for every P, $T(P)$ respects the provided connectivity constraints

- Proofs proceed by induction on P

Example: X/Z Propagation

- We will want to prove that for any instruction list lst, (propagate_X q lst) has the same denotation as (X q ; lst)
  - propagate_X q lst ≡ X q ; lst

- Proof proceeds by induction on lst

```
let propagate_X q lst = match lst with
  | []          → [X q]
  | X q :: t    → t
  | H q :: t    → H q ; propagate_Z q t
  | Rz q :: t → Rz† q ; propagate_X q t
  ...
```

Example: X/Z Propagation

- We will want to prove that for any instruction list lst, (propagate_X q lst) has the same denotation as (X q ; lst)
  - propagate_X q lst ≡ X q ; lst

- Proof proceeds by induction on lst

```
let propagate_X q lst = match lst with
  | []          → [X q]
  | X q :: t    → t
  | H q :: t    → H q ; propagate_Z q t
  | Rz q :: t   → Rz† q ; propagate_X q t
  ...
```

propagate_X q [] → [X q] ≡ X q ; []

Example: X/Z Propagation

- We will want to prove that for any instruction list lst, (propagate_X q lst) has the same denotation as (X q ; lst)
  - propagate_X q lst ≡ X q ; lst

- Proof proceeds by induction on lst

```
let propagate_X q lst = match lst with
  | []          → [X q]
  | X q :: t    → t
  | H q :: t    → H q ; propagate_Z q t
  | Rz q :: t → Rz† q ; propagate_X q t
  ...
```

propagate_X q (X q :: t) → t ≡ X q ; X q ; t

Example: X/Z Propagation

- We will want to prove that for any instruction list lst, (propagate_X q lst) has the same denotation as (X q ; lst)
  - propagate_X q lst ≡ X q ; lst

- Proof proceeds by induction on lst

```
let propagate_X q lst = match lst with
  | []          → [X q]
  | X q :: t    → t
  | H q :: t    → H q ; propagate_Z q t
  | Rz q :: t → Rz† q ; propagate_X q t
  ...
```

propagate_X (Rz q :: t)
→ Rz† q ; propagate_X q t
≡ Rz† q ; (X q ; t)
≡ X q ; Rz q ; t

Verifying Matrix Equivalences

- Proving matrix equivalences in Coq is tedious
- E.g. $X\ n;\ CNOT\ m\ n \equiv CNOT\ m\ n;\ X\ n$

$$apply_1(X, n, d) \times apply_2(CNOT, m, n, d) = apply_2(CNOT, m, n, d) \times apply_1(X, n, d).$$

Verifying Matrix Equivalences

- Proving matrix equivalences in Coq is tedious
- E.g. $X\ n;\ CNOT\ m\ n \equiv CNOT\ m\ n;\ X\ n$

$$apply_1(X, n, d) \times apply_2(CNOT, m, n, d) = apply_2(CNOT, m, n, d) \times apply_1(X, n, d).$$

$$apply_1(X, n, d) = I_{2^n} \otimes \sigma_x \otimes I_{2^q}$$
$$apply_2(CNOT, m, n, d) = I_{2^m} \otimes |1\rangle\langle 1| \otimes I_{2^p} \otimes \sigma_x \otimes I_{2^q} + I_{2^m} \otimes |0\rangle\langle 0| \otimes I_{2^p} \otimes I_2 \otimes I_{2^q}$$

Verifying Matrix Equivalences

- Proving matrix equivalences in Coq is tedious
- E.g. $X\ n;\ CNOT\ m\ n \equiv CNOT\ m\ n;\ X\ n$

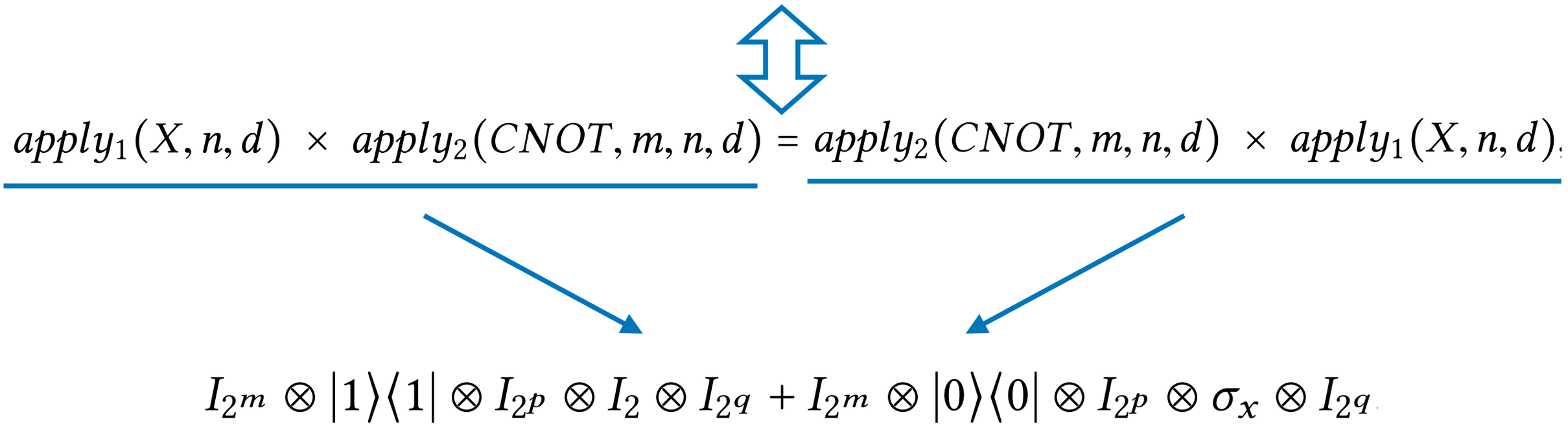

Verifying Matrix Equivalences

- Proving matrix equivalences in Coq is tedious
- E.g. $X\ n;\ CNOT\ m\ n \equiv CNOT\ m\ n;\ X\ n$

$$apply_1(X, n, d) \times apply_2(CNOT, m, n, d) = apply_2(CNOT, m, n, d) \times apply_1(X, n, d).$$

- Fortunately, this is mostly automated in our development

Experiment

- Evaluated unitary optimizations
- Compared against Qiskit, t|ket⟩, PyZX, Nam et al. and Amy et al.[2]
- Benchmark of 29 programs from Amy et al., ranging from 45 to 61629 gates and 5 to 192 qubits
- Considered reduction in total gate count and T-gate count

[2]Amy et al. *Polynomial-Time T-Depth Optimization of Clifford+T Circuits Via Matroid Partitioning.* 2014.

Results

- Average gate count reduction

Nam et al.	Qiskit	t|ket⟩	VOQC
26.5%	10.7%	11.2%	18.4%

- Average T-count reduction

Amy et al.	Nam et al.	PyZX	VOQC
40.9%	41.0%	42.6%	39.4%

Results

- Average gate count reduction

Nam et al.	**Qiskit**	**t|ket⟩**	**VOQC** ✓
26.5%	10.7%	11.2%	18.4%

- Average T-count reduction

Amy et al.	**Nam et al.**	**PyZX**	**VOQC** ✓
40.9%	41.0%	42.6%	39.4%

Is the translation between industry IRs and SQIR correct?

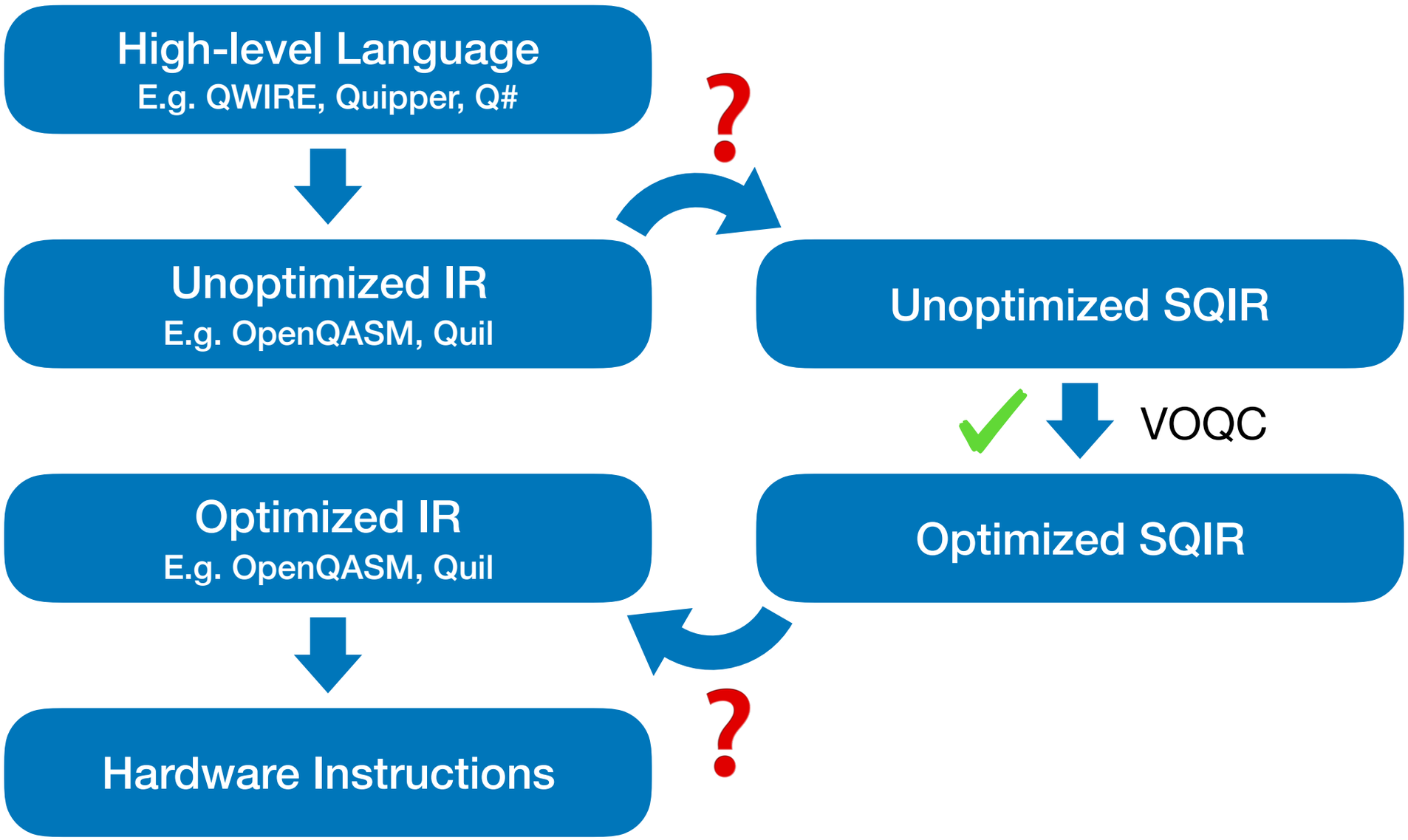

Is the translation between industry IRs and SQIR correct?

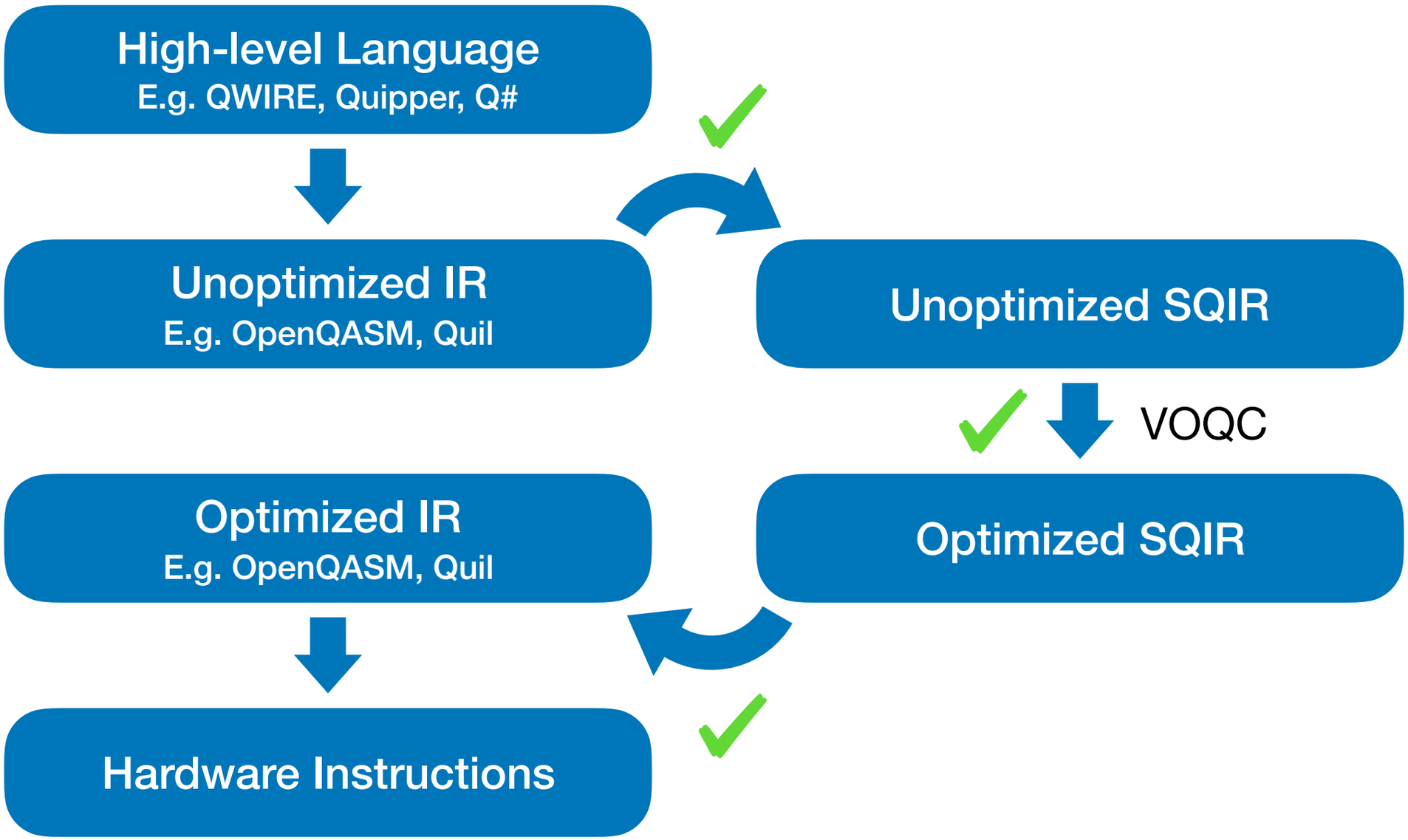

We verify translation between OpenQASM and SQIR

A feature-complete parser for OpenQASM

Translation between unitary fragments of the two languages

A denotational semantics for unitary OpenQASM

Semantic preservation property of translation

Unitary SQIR and OpenQASM have fairly similar abstract syntax

Unitary SQIR and OpenQASM have fairly similar abstract syntax

SQIR

$$U \ ::= U_1;\ U_2 \mid G\ q \mid G\ q_1\ q_2$$

$$G \ ::= H \mid CNOT$$

Qubits are indices into a global register

Unitary SQIR and OpenQASM have fairly similar abstract syntax

SQIR

$$U \ ::= U_1;\ U_2 \mid G\ q \mid G\ q_1\ q_2$$

$$G \ ::= H \mid CNOT$$

Qubits are indices into a global register

OpenQASM[a]

Expression	E	::=	$x \mid x[i]$
Unitary Statement	U	::=	$\mathsf{H}(E) \mid \mathsf{CX}(E_1, E_2) \mid E(E_1, \ldots, E_n) \mid U_1;\ U_2$
Command	C	::=	$\mathtt{qreg}\ x[i] \mid \mathtt{gate}\ x(x_1, \ldots, x_n)\ \{\ U\ \} \mid U \mid C_1;\ C_2$

OpenQASM is a larger language
that supports declaring qubit registers
and user-defined gates

Unitary SQIR and OpenQASM have fairly similar abstract syntax

SQIR

$$U \ ::= \boxed{U_1;\ U_2} \mid G\ q \mid G\ q_1\ q_2$$

$$G \ ::= H \mid CNOT$$

Qubits are indices into a global register

OpenQASM[a]

Expression	E	::=	$x \mid x[i]$
Unitary Statement	U	::=	$\mathsf{H}(E) \mid \mathsf{CX}(E_1, E_2) \mid E(E_1, \ldots, E_n) \mid \boxed{U_1;\ U_2}$
Command	C	::=	$\mathtt{qreg}\ x[i] \mid \mathtt{gate}\ x(x_1, \ldots, x_n)\ \{\ U\ \} \mid U \mid C_1;\ C_2$

OpenQASM is a larger language
that supports declaring qubit registers
and user-defined gates

Unitary SQIR and OpenQASM have fairly similar abstract syntax

SQIR

$$U \ ::= U_1;\ U_2 \mid \boxed{G\ q \mid G\ q_1\ q_2}$$

$$G \ ::= H \mid CNOT$$

Qubits are indices into a global register

OpenQASM[a]

Expression	E	::=	$x \mid x[i]$
Unitary Statement	U	::=	$\boxed{\mathtt{H}(E) \mid \mathtt{CX}(E_1, E_2) \mid E(E_1, \ldots, E_n)} \mid U_1;\ U_2$
Command	C	::=	$\mathtt{qreg}\ x[i] \mid \mathtt{gate}\ x(x_1, \ldots, x_n)\ \{\ U\ \} \mid U \mid C_1;\ C_2$

OpenQASM is a larger language
that supports declaring qubit registers
and user-defined gates

Unitary SQIR and OpenQASM have fairly similar abstract syntax

SQIR

$$U \ ::= U_1;\ U_2 \mid G\ q \mid G\ q_1\ q_2$$

$$G \ ::= H \mid CNOT$$

Qubits are indices into a global register

*Only shown a sample gate set of Hadamard (**H**) and controlled NOT (**CNOT** or **CX**)*

OpenQASM[a]

Expression	E	::=	$x \mid x[i]$
Unitary Statement	U	::=	$\mathtt{H}(E) \mid \mathtt{CX}(E_1, E_2) \mid E(E_1, \ldots, E_n) \mid U_1;\ U_2$
Command	C	::=	$\mathtt{qreg}\ x[i] \mid \mathtt{gate}\ x(x_1, \ldots, x_n)\ \{\ U\ \} \mid U \mid C_1;\ C_2$

OpenQASM is a larger language
that supports declaring qubit registers
and user-defined gates

Unitary SQIR and OpenQASM have fairly similar abstract syntax

SQIR

$$U \ ::= U_1;\ U_2 \mid G\ q \mid G\ q_1\ q_2$$

$$G \ ::= H \mid CNOT$$

Qubits are indices into a global register

*Only shown a sample gate set of Hadamard (**H**) and controlled NOT (**CNOT** or **CX**)*

OpenQASM[a]

Expression	E	::=	$x \mid x[i]$
Unitary Statement	U	::=	$\mathtt{H}(E) \mid \mathtt{CX}(E_1, E_2) \mid E(E_1, \ldots, E_n) \mid U_1;\ U_2$
Command	C	::=	$\mathtt{qreg}\ x[i] \mid \mathtt{gate}\ x(x_1, \ldots, x_n)\ \{\ U\ \} \mid U \mid C_1;\ C_2$

OpenQASM is a larger language
that supports declaring qubit registers
and user-defined gates

[a]Amy M. *Sized Types for Low-Level Quantum Metaprogramming*. Reversible Computation. RC 2019.

Denotational semantics of SQIR and OpenQASM correspond

Denotational semantics of SQIR and OpenQASM correspond

SQIR

$$[\![U_1;\ U_2]\!]_d = [\![U_2]\!]_d \times [\![U_1]\!]_d$$

$$[\![G_1\ q]\!]_d = \begin{cases} apply_1(G_1,\ q,\ d) & \text{well-typed} \\ 0_{2^d} & \text{otherwise} \end{cases}$$

$$[\![G_2\ q_1\ q_2]\!]_d = \begin{cases} apply_2(G_2,\ q_1,\ q_2,\ d) & \text{well-typed} \\ 0_{2^d} & \text{otherwise} \end{cases}$$

A SQIR unitary program denotes a $2^d \times 2^d$ unitary matrix

Denotational semantics of SQIR and OpenQASM correspond

SQIR

$$[\![U_1;\ U_2]\!]_d = [\![U_2]\!]_d \times [\![U_1]\!]_d$$

$$[\![G_1\ q]\!]_d = \begin{cases} apply_1(G_1,\ q,\ d) & \text{well-typed} \\ 0_{2^d} & \text{otherwise} \end{cases}$$

$$[\![G_2\ q_1\ q_2]\!]_d = \begin{cases} apply_2(G_2,\ q_1,\ q_2,\ d) & \text{well-typed} \\ 0_{2^d} & \text{otherwise} \end{cases}$$

A SQIR unitary program denotes a $2^d \times 2^d$ unitary matrix

OpenQASM

Value	V	=	Location, l + Loc. Array, $(l_j, \ldots, l_k)$ + Unitary Gate, $\lambda(x_1, \ldots, x_n).U$
Environment	σ	=	Identifier $\rightarrow$ Value
Quantum State	$\lvert\psi\rangle$	=	2^d-dimension complex vector

Denotational semantics of SQIR and OpenQASM correspond

SQIR

$$[\![U_1;\ U_2]\!]_d = [\![U_2]\!]_d \times [\![U_1]\!]_d$$

$$[\![G_1\ q]\!]_d = \begin{cases} apply_1(G_1,\ q,\ d) & \text{well-typed} \\ 0_{2^d} & \text{otherwise} \end{cases}$$

$$[\![G_2\ q_1\ q_2]\!]_d = \begin{cases} apply_2(G_2,\ q_1,\ q_2,\ d) & \text{well-typed} \\ 0_{2^d} & \text{otherwise} \end{cases}$$

A SQIR unitary program denotes a $2^d \times 2^d$ unitary matrix

OpenQASM

Value	V	=	Location, l + Loc. Array, $(l_j, \ldots, l_k)$ + Unitary Gate, $\lambda(x_1, \ldots, x_n).U$
Environment	σ	=	Identifier $\rightarrow$ Value
Quantum State	$\lvert\psi\rangle$	=	2^d-dimension complex vector

$$(\!|-|\!)_E \quad : \quad E \times \sigma \rightarrow V$$

$$(\!|-|\!)_U \quad : \quad U \times \sigma \times |\psi\rangle \rightarrow |\psi'\rangle$$

$$(\!|-|\!)_C \quad : \quad C \times \sigma \times |\psi\rangle \rightarrow \sigma' \times |\psi'\rangle$$

Expressions need environment and return bound values

Unitary statements modify quantum state

Commands modify both environment and quantum state

Denotational semantics of SQIR and OpenQASM correspond

SQIR

$$[\![U_1;\ U_2]\!]_d = [\![U_2]\!]_d \times [\![U_1]\!]_d$$

$$[\![G_1\ q]\!]_d = \begin{cases} apply_1(G_1,\ q,\ d) & \text{well-typed} \\ 0_{2^d} & \text{otherwise} \end{cases}$$

$$[\![G_2\ q_1\ q_2]\!]_d = \begin{cases} apply_2(G_2,\ q_1,\ q_2,\ d) & \text{well-typed} \\ 0_{2^d} & \text{otherwise} \end{cases}$$

A SQIR unitary program denotes a $2^d \times 2^d$ unitary matrix

OpenQASM

Value	V	=	Location, l + Loc. Array, $(l_j, \ldots, l_k)$ + Unitary Gate, $\lambda(x_1, \ldots, x_n).U$
Environment	σ	=	Identifier $\rightarrow$ Value
Quantum State	$\lvert\psi\rangle$	=	2^d-dimension complex vector

$$(\!|-|\!)_E \quad : \quad E \times \sigma \rightarrow V$$

$$(\!|-|\!)_U \quad : \quad U \times \sigma \times |\psi\rangle \rightarrow |\psi'\rangle$$

$$(\!|-|\!)_C \quad : \quad C \times \sigma \times |\psi\rangle \rightarrow \sigma' \times |\psi'\rangle$$

Details elided

Expressions need environment and return bound values

Unitary statements modify quantum state

Commands modify both environment and quantum state

Semantic preservation properties are maintained during translation

Semantic preservation properties are maintained during translation

$$f : \mathcal{L}(\textsc{sqir}) \to \mathcal{L}(\text{OpenQASM})$$
$$g : \mathcal{L}(\text{OpenQASM}) \to \mathcal{L}(\textsc{sqir})$$

Semantic preservation properties are maintained during translation

$$f : \mathcal{L}(\text{sQIR}) \to \mathcal{L}(\text{OpenQASM})$$
$$g : \mathcal{L}(\text{OpenQASM}) \to \mathcal{L}(\text{sQIR})$$

For all valid programs in SQIR of dimension d, their denotation is equivalent to the denotation of their translation, and vice versa.

$$\forall x \in \mathcal{L}(\text{sQIR}), \quad [\![x]\!]_d = (\!|f(x)|\!)$$
$$\forall y \in \mathcal{L}(\text{OpenQASM}), \quad (\!|y|\!) = [\![g(y)]\!]_d$$

Semantic preservation properties are maintained during translation

$$f : \mathcal{L}(\text{sQIR}) \to \mathcal{L}(\text{OpenQASM})$$
$$g : \mathcal{L}(\text{OpenQASM}) \to \mathcal{L}(\text{sQIR})$$

For all valid programs in SQIR of dimension d, their denotation is equivalent to the denotation of their translation, and vice versa.

$$\forall x \in \mathcal{L}(\text{sQIR}), \quad [\![x]\!]_d = (\!|f(x)|\!)$$
$$\forall y \in \mathcal{L}(\text{OpenQASM}), \quad (\!|y|\!) = [\![g(y)]\!]_d$$

Further, converting from SQIR to OpenQASM and back recovers the original program.

$$\forall x \in \mathcal{L}(\text{sQIR}), \quad g(f(x)) = x$$

Semantic preservation properties are maintained during translation

$$f : \mathcal{L}(\text{sQIR}) \to \mathcal{L}(\text{OpenQASM})$$
$$g : \mathcal{L}(\text{OpenQASM}) \to \mathcal{L}(\text{sQIR})$$

For all valid programs in SQIR of dimension d, their denotation is equivalent to the denotation of their translation, and vice versa.

$$\forall x \in \mathcal{L}(\text{sQIR}), \quad [\![x]\!]_d = (\!|f(x)|\!)$$
$$\forall y \in \mathcal{L}(\text{OpenQASM}), \quad (\!|y|\!) = [\![g(y)]\!]_d$$

Further, converting from SQIR to OpenQASM and back recovers the original program.

$$\forall x \in \mathcal{L}(\text{sQIR}), \quad g(f(x)) = x$$

But the reverse direction does not hold.

OpenQASM parser written in OCaml programming language

Conforms to OpenQASM spec[b]

Uses OCamllex and Menhir parser generator

Available now as an OCaml library on OPAM package repository:

```
opam install openQASM
```

[b]Cross et al. *Open Quantum Assembly Language*. arXiv:1707.03429

Ongoing and Future Work

- We’re always looking for more transformations to verify
  - Optimization from other compilers (incl. error aware)
  - More sophisticated circuit mapping
  - Compilation of classical circuits
- Performance improvements; evaluations on larger sets of benchmarks
- Larger verified toolchain
  - Translation and verification of non-unitary fragments
  - Validate our OpenQASM parser using Menhir’s Coq backend
  - Verify translation from high-level languages such as QWIRE

Conclusions

- We have developed a compiler **VOQC** and an IR **SQIR**, both implemented and verified in Coq
  - Performance is comparable to state-of-the-art compilers
- We have also taken steps to ease interoperability with industry toolchains with translation from and to OpenQASM
- Lots of ongoing work, let us know if you're interested!
- Code:
  - `github.com/inQWIRE/SQIR`
  - `github.com/inQWIRE/openqasm-parser`
- Draft of VOQC paper: `cs.umd.edu/~mwh/papers/voqc-draft.pdf`